TPR 280, 80 °C, DN 16 ISO-KF

PFEIFFER

TPR 280

Illustration only

TPR 280, 80 °C, DN 16 ISO-KF

- Flange size DN 16 ISO-KF
- For general vacuum applications
- Compact and rugged
- Maximum pressure refers to inert gases

Dimensions

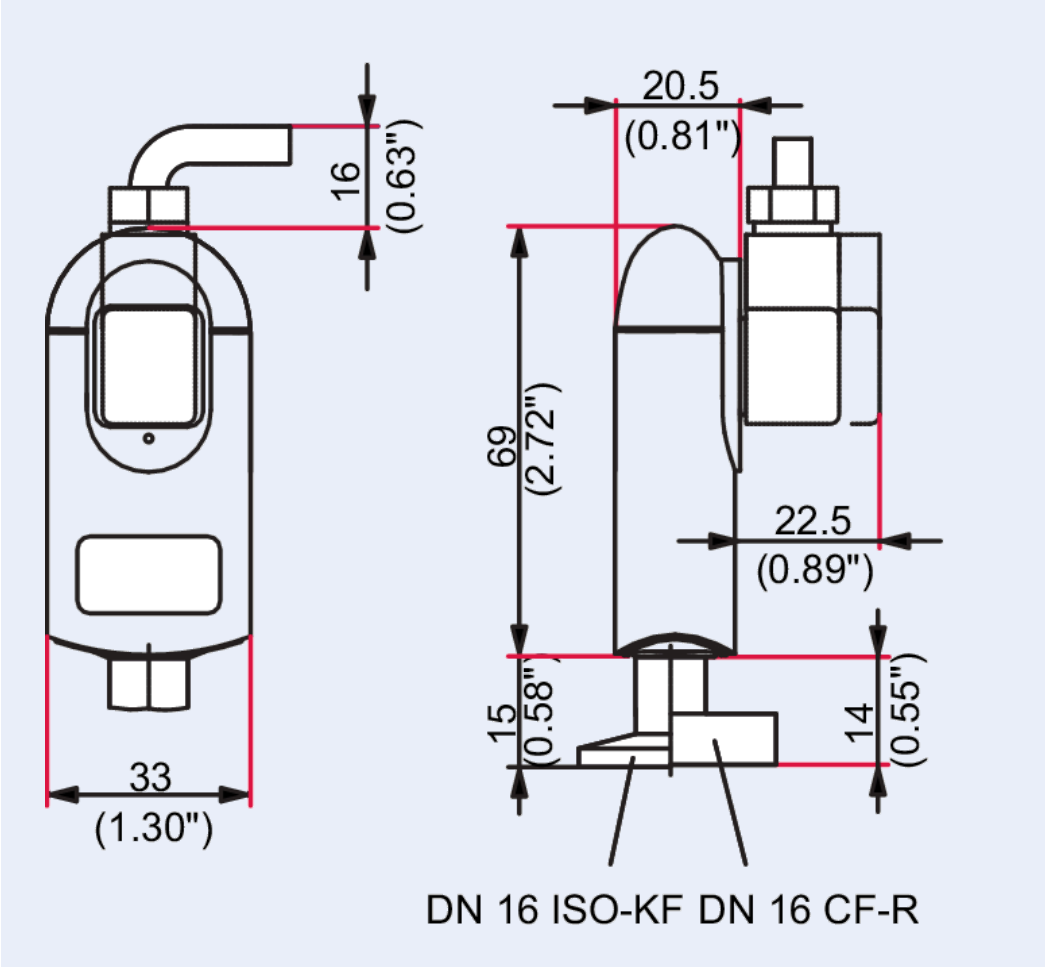

TPR 280

Technical Data	TPR 280, 80 °C, DN 16 ISO-KF
Output signal: Measuring range	1.5 – 8.5 V
Feedthrough	Glass
Measuring range	$1 \cdot 10^{-4}$ – $1 \cdot 10^{3}$ hPa
Flange, material	Stainless steel
Bakeout temperature at the flange	80 °C
Seal	Metal
Anode	130727
Ambient temperature	5 – 60 °C
Special feature	Stainless steel, metal sealed
Temperature: Storage, max	65 °C
Temperature: Storage, min	-20 °C
Measuring accuracy in range 1	100 % (of measured value) ($1 \cdot 10^{-4}$ hPa – $5 \cdot 10^{-4}$ hPa)
Measuring accuracy in range 2	50 % (of measured value) ($5 \cdot 10^{-4}$ hPa – $1 \cdot 10^{-3}$ hPa)
Measuring accuracy in range 3	15 % (of measured value) ($1 \cdot 10^{-3}$ hPa – $2 \cdot 10^{-3}$ hPa)
Measuring accuracy in range 4	10 % (of measured value) ($2 \cdot 10^{-3}$ hPa – $1 \cdot 10^{2}$ hPa)
Measuring accuracy in range 5	50 % (of measured value) ($1 \cdot 10^{2}$ hPa – $1 \cdot 10^{3}$ hPa)
Measuring method	Pirani
Input voltage(s)	14 – 30 V DC
Volume	1.5 cm^3
Bakeout temperature at the flange	80 °C | 176 °F | 353.15 K
Output signal: Minimum load	10 kΩ
Pressure max.	$1 \cdot 10^{4}$ hPa | $7.5 \cdot 10^{3}$ Torr | $1 \cdot 10^{4}$ mbar
Resolution	1 % of reading
Pressure max.	$1 \cdot 10^{4}$ hPa
Response time	80 ms
Power consumption max.	1 W
Output signal: Minimum load	10 kΩ
Connection flange	DN 16 ISO-KF
Weight	80 g
Filament	Tungsten

Order number	TPR 280, 80 °C, DN 16 ISO-KF
TPR 280, 80 °C, DN 16 ISO-KF	PT R26 950 B

Accessories	TPR 280, 80 °C, DN 16 ISO-KF
Spare measurement system for TPR 280, TTR 91, TTR 91 S DN 16 ISO-KF	PT 120 133 -T

Are you looking for an optimum vacuum solution?

Talk to us:
Pfeiffer Vacuum GmbH
Germany
T +49 6441 802-0

Or scan the barcode, to visit our web page:

https://webportal.pfeiffer-vacuum.com/global/en/contact

Errors and/or changes excepted. - 9/30/2025

Follow Us On Social Media
#pfeiffervacuum

www.pfeiffer-vacuum.com

PFEIFFER