# L-BV 7 N
# Data sheet 2BV7 070
## Liquid ring compressor

## General information

Elmo Rietschle compressors of the family L-BV7 are suitable for compressing gases and wet vapours.

The compressor of the model range 2BV7 are especially space-saving in their monoblock design. They are available in cast iron (standard color RAL 9006) and in stainless steel (all stainless steel parts are pickled and passivated). The motor is painted as standard in RAL 9006.

## Performance curves

### Compressor operation

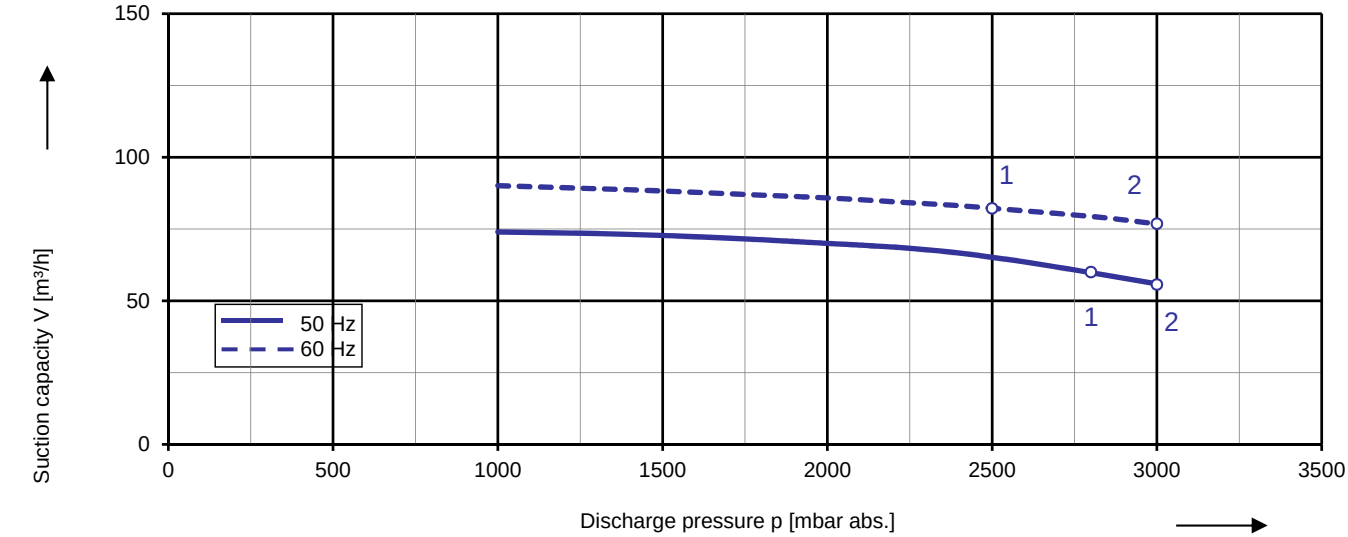


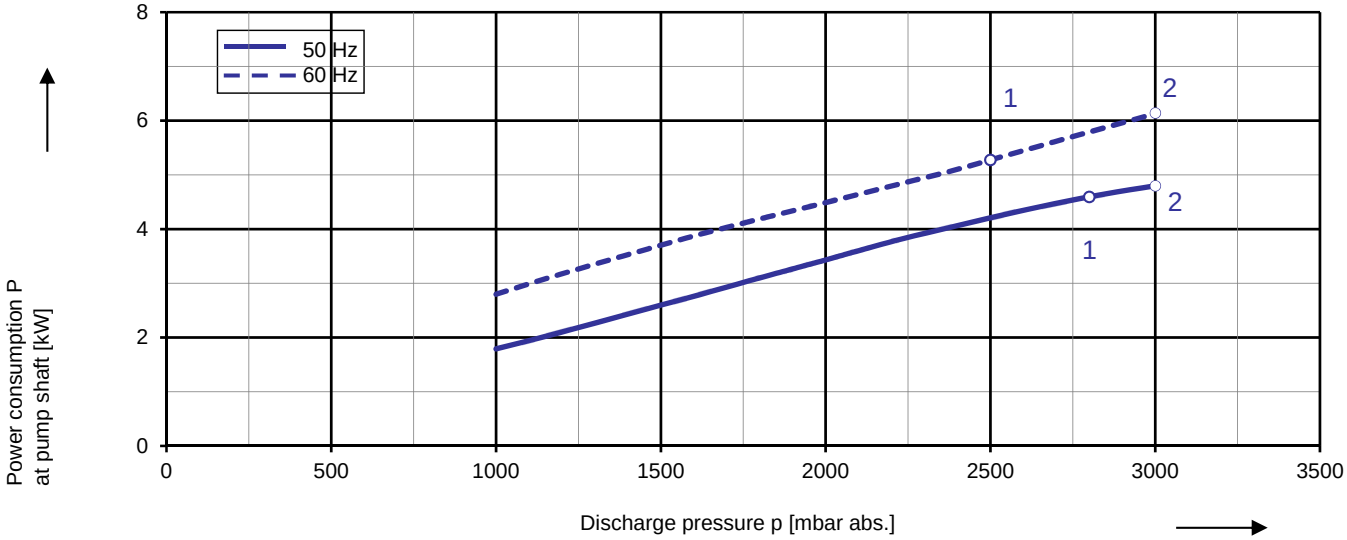


The characteristic curves are based on the evacuation of 50 % saturated air and an intake temperature of 20 °C. At a suction pressure of 1013 mbar abs. and a temperature of the operating liquid of 15 °C (water as operating liquid) the characteristic curves will be achieved. The tolerance is ± 10 %.

The motors are supplied as standard for the input voltage ranges of 50 and 60 Hz and for the protection category IP55 as well as approbated for UL and CSA. ATEX-Compressors with 2006/42 EG for category 2G are available, too.

# Selection and ordering data

**Typ 2BV7 070**

| Fre-quency | Rated Voltage | Rated Current | Rated Power | Service factor | Efficiency | Quantity of operating liquid 1) | Sound pressure level 2) | Weight Approx. | Order No. |
|---|---|---|---|---|---|---|---|---|---|
| Hz | V | A | kW | SF | - | $m^3/h$ | dB(A) | kg | |
| **3~ 50/60 Hz, IP55, Insulation material class F, UL 1450 (certificate number E225239)** | | | | | | | | | |
| 50 | 190-210 Δ | 17,7 Δ | 4,6 | 1,00 | IE3 | 0,40 | 68 | 39 | **2BV7070-2 □ K08-1B** |
| 60 | 190-210 YY / 380-420 Y | 20,0 YY / 10,0 Y | 5,3 | 1,00 | IE3 | 0,28 | 74 | | |
| | 200 YY | 20,0 YY | 5,3 | 1,00 | NP | 0,28 | 74 | | |
| 50 | 190-210 Δ | 23,5 Δ | 6,3 | 1,00 | IE3 | 0,40 | 68 | 53 | **2BV7070-3 □ K08-1B** |
| 60 | 190-210 YY / 380-420 Y | 27,6 YY / 13,8 Y | 7,3 | 1,00 | IE3 | 0,28 | 74 | | |
| | 200 YY | 27,6 YY | 7,3 | 1,00 | NP | 0,28 | 74 | | |
| **3~ 50/60 Hz, IP55, Insulation material class F, UL 1450 (certificate number E225239)** | | | | | | | | | |
| 50 | 220-240 Δ / 380-420 Y | 15,4 Δ / 8,9 Y | 4,6 | 1,00 | IE3 | 0,40 | 68 | 39 | **2BV7070-2 □ K08-6B** |
| 60 | 220-240 YY / 440-480 Y | 17,4 YY / 8,7 Y | 5,3 | 1,00 | IE3 | 0,28 | 74 | | |
| | 230 YY / 460 Y | 17,4 YY / 8,7 Y | 5,3 | 1,00 | NP | 0,28 | 74 | | |
| 50 | 220-240 Δ / 380-420 Y | 20,4 Δ / 11,8 Y | 6,3 | 1,00 | IE3 | 0,40 | 68 | 53 | **2BV7070-3 □ K08-6B** |
| 60 | 220-240 YY / 440-480 Y | 24,0 YY / 12,0 Y | 7,3 | 1,00 | IE3 | 0,28 | 74 | | |
| | 230 YY / 460 Y | 24,0 YY / 12,0 Y | 7,3 | 1,00 | NP | 0,28 | 74 | | |
| **3~ 50/60 Hz, IP55, Insulation material class F, UL 1450 (certificate number E225239)** | | | | | | | | | |
| 50 | 500 Y | 7,1 Y | 4,6 | 1,00 | IE3 | 0,40 | 68 | 39 | **2BV7070-2 □ Q08-3B** |
| 60 | 575 Y | 6,95 Y | 5,3 | 1,00 | NP | 0,28 | 74 | | |
| 50 | 500 Y | 9,5 Y | 6,3 | 1,00 | IE3 | 0,28 | 74 | 53 | **2BV7070-3 □ Q08-3B** |
| 60 | 575 Y | 9,6 Y | 7,3 | 1,00 | NP | 0,40 | 68 | | |
| **3~ 50/60 Hz, IP55, Insulation material class F, UL 1450 (certificate number E225239)** | | | | | | | | | |
| 50 | 380-420 Δ / 660-725 Y | 8,9 Δ / 5,1 Y | 4,6 | 1,00 | IE3 | 0,40 | 68 | 39 | **2BV7070-2 □ Q08-7B** |
| 60 | 440-480 Δ | 8,7 Δ | 5,3 | 1,00 | IE3 | 0,28 | 74 | | |
| | 460 Δ | 8,7 Δ | 5,3 | 1,00 | NP | 0,28 | 74 | | |
| 50 | 380-420 Δ / 660-725 Y | 11,8 Δ / 6,8 Y | 6,3 | 1,00 | IE3 | 0,40 | 68 | 53 | **2BV7070-3 □ Q08-7B** |
| 60 | 440-480 Δ | 12,0 Δ | 7,3 | 1,00 | IE3 | 0,28 | 74 | | |
| | 460 Δ | 12,0 Δ | 7,3 | 1,00 | NP | 0,28 | 74 | | |

| **Materials** | | | | |
|---|---|---|---|---|
| **Casing** | **Port plate** | **Impeller** | **Lantern** | |
| CrNi steel | CrNi steel | Bronze | Cast iron | **A** |

1) The quantities of operating liquid apply for fresh water operation without discharge liquid separator.

2) Measuring surface sound pressure level acc. to EN ISO 3744, measured with an equivalent unit at a distance of 1 m. The pump is throttled to an average suction pressure, with piping connected, but no relief valves fitted, tolerance ±3 dB (A).

| Voltage range 50 Hz | Voltage range 60Hz | Efficiency | c UL us 60 Hz | 2BV7…-.. □ | ..- | □ |
|---|---|---|---|---|---|---|
| **3~** | | | | | | |
| 200 VΔ<br>190-210 VΔ | 200 V YY / 230 VΔ / 400 VY<br>190-210 VYY / 220-240 VΔ / 380-420VY | NEMA Premium IE3 | • | | K | 1 |
| 200 V YY / 230 VΔ / 400 VY<br>190-210 VYY / 220-240 VΔ / 380-420VY | 230 V YY / 460 VY<br>220-240 VYY / 440-480VY | NEMA Premium IE3 | • | | K | 6 |
| 475-525 V Y | 550-600 V Y | NEMA Premium | • | | Q | 3 |
| 475-525 VΔ | 550-600 VΔ | NEMA Premium | • | | Q | 5 |
| 400 VΔ / 690 V Y | 460 VΔ | NEMA Premium | • | | Q | 7 |

All L-BV fulfil the 2006/42/EC (machinery) and 2006/95/EC (low voltage) directives and the EN 60034-1 norm “Rotating electrical machines”. The motors comply with EN 60 034-1 / -2 / -30 (IEC 60034) and thermal class F. Voltage tolerances for three phase motors are +/-10%. The frequency tolerance is +/- 2 % maximum. Service factor (SF) and motor efficiency according NEMA MG1-12.

The cast iron machines are completely painted in standard color RAL 9006.
All cast parts of the stainless steel version are pickled and passivated, the motor is standardly painted in RAL 9006.

# Materials

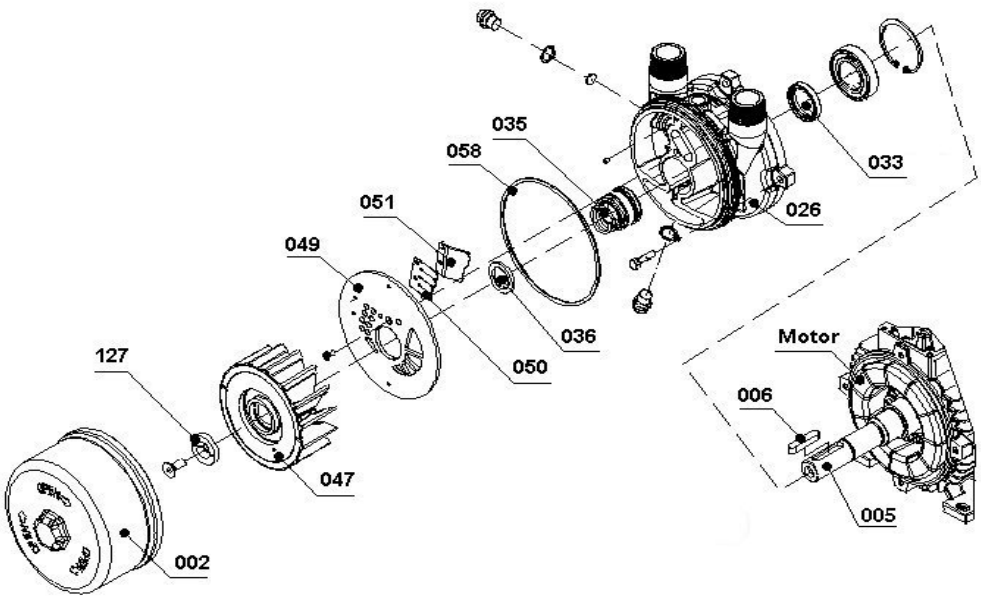


| Part No. | | Materials |
|---|---|---|
| | | 2BV7. ...-.**A**...-.. |
| | | **CrNi steel / bronze / cast iron** |

| | | |
|---|---|---|
| 002 | Casing | Chrome-nickel steel (X5CrNi 1810 - / 1.4301) EN 10088 - 2 |
| 005 | Pump shaft | Chrome-steel (X20Cr13 / 1.4021) EN 10088 - 3 |
| 006 | Feather key | Chrome-nickel-molybdenum steel (X6CrNiMoTi 17-12-2 / 1.4571) EN 10088 - 3 |
| 026 | Lantern | Grey cast iron (EN-GJL200 / EN-JL 2030) EN 1561 |
| 033 | Radial shaft seal | Nitrile-butadiene-caotchouc (NBR) ISO 1629 |
| 035 | Mechanical seal | Carbon / SIC / Viton (FPM) / chrome-nickel-molybdenum steel (EN 12756 - BQ1VGG) |
| 036 | Washer | Chrome-nickel-molybdenum steel (X5CrNiMo 17-12-2 / 1.4401) EN 10088 - 3 |
| 047 | Impeller | Cast aluminium bronze (G-CuAl10Fe5Ni5 / CC33G-GS) EN 1982 |
| 049 | Port plate | Chrome-nickel-molybdenum steel (X6CrNiMoTi 17-12-2 / 1.4541) EN10088-2 |
| 050 | Valve plate | Teflon(PTFE) |
| 051 | Intercepting plate | Chrome-nickel-molybdenum steel (X5CrNiMo 17-12-2 / 1.4401) EN 10088 - 2 |
| 058 | Seal (O-Ring) | Nitrile-butadiene-caotchouc (NBR) ISO 1629 |
| 127 | Retaining washer | Chrome-nickel-molybdenum steel (X6CrNiMoTi 17-12-2 / 1.4571) EN 10088 - 2 |

Changes in particular of the quoted performance curve, data and weights may occur without prior notice. The data given do not constitute an obligation from our side to deliver as shown.

Elmo Rietschle is a brand of Gardner Denver

Gardner Denver

Your Ultimate Source for Vacuum and Pressure

**Gardner Denver Deutschland GmbH**
Industriestraße 26
97616 Bad Neustadt - Germany
Tel.: +49 9771 6888-0
Fax: +49 9771 6888-4000

**Gardner Denver Schopfheim GmbH**
Roggenbachstraße 58
79650 Schopfheim - Germany
Tel.: +49 7622 392-0
Fax: +49 7622 392-300

www.gd-elmorietschle.com ▪ er.de@gardnerdenver.com